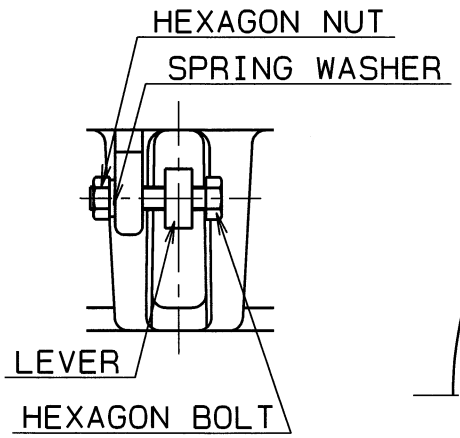

A

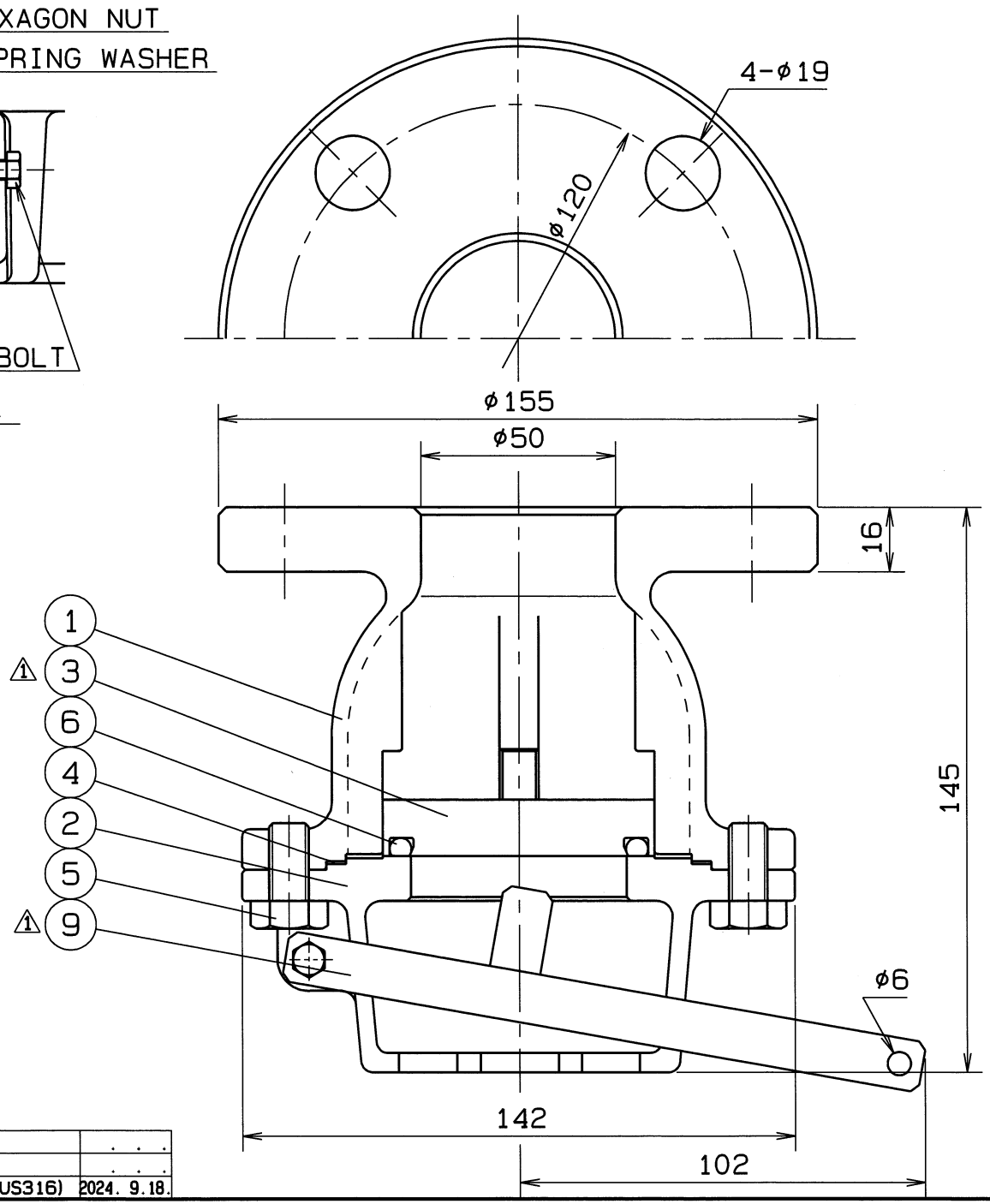

SPEC.		TEST PRESS.	
FLUID		SHELL	HYDRO 2.1 MPa
PRESS.	MPa	SEAT	AIR 0.6 MPa
TEMP.	℃		AIR MPa

END FLANGE: JIS B 2220

No.	NAME OF PARTS	Q.TY	MATERIALS	REMARKS
	SPRING WASHER	1	SUS 304	
	HEXAGON NUT	1	SUS 304	
10	HEXAGON BOLT	1	SUS 304	
⚠1 9	LEVER	1	SUS 316	
6	O RING	1	NBR	
5	HEXAGON BOLT	6	SUS 304	
4	GASKET PACKING	1	P.T.F.E.	
⚠1 3	DISC	1	SUS 316	
2	STRAINER	1	SCS 14A	
1	BODY	1	SCS 14A	

NAME	JIS 10K FLANGED END FOOT VALVES		
TYPE	N-215L	SIZE	50A
DWG.No.	FAFS-0163 ◇1	APPROVED BY	H.Ogura
DATE	APR.12.2007	CHECKED BY	H.Ogura
SCALE	:	DESIGNED BY	M.Yamashima
THIRD ANGLE PROJECTION METHOD		DRAWN BY	T.Baba

O. N. INDUSTRIES LTD.

⚠3		. . .
⚠2		. . .
⚠1	材質修正 (SUS304→SUS316)	2024. 9.18.

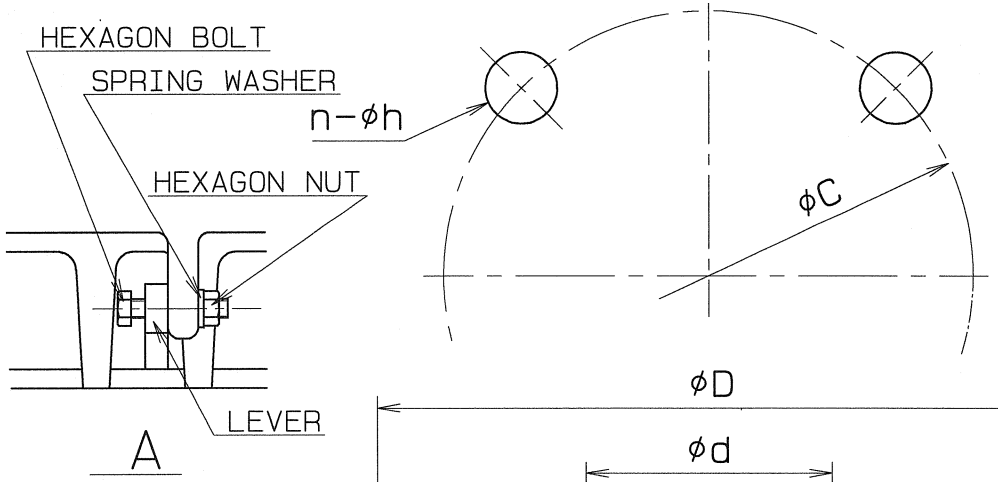

SIZE	d	D	T	BOLT HOLE C	BOLT HOLE n	BOLT HOLE h	H	L	W	B	Q.TY
65A	65	175	18	140	4	19	176	180	112	6	
80A	80	185	18	150	8	19	198	217	125	7	
100A	100	210	18	175	8	19	240	244	143	7	
125A	125	250	20	210	8	23	275	291	165	10	
150A	150	280	22	240	8	23	334	340	197	12	
200A	200	330	22	290	12	23	445	415	261	13	
250A	250	400	24	355	12	25	520	470	316	15	
300A	300	445	24	400	16	25	611	556	422	17	

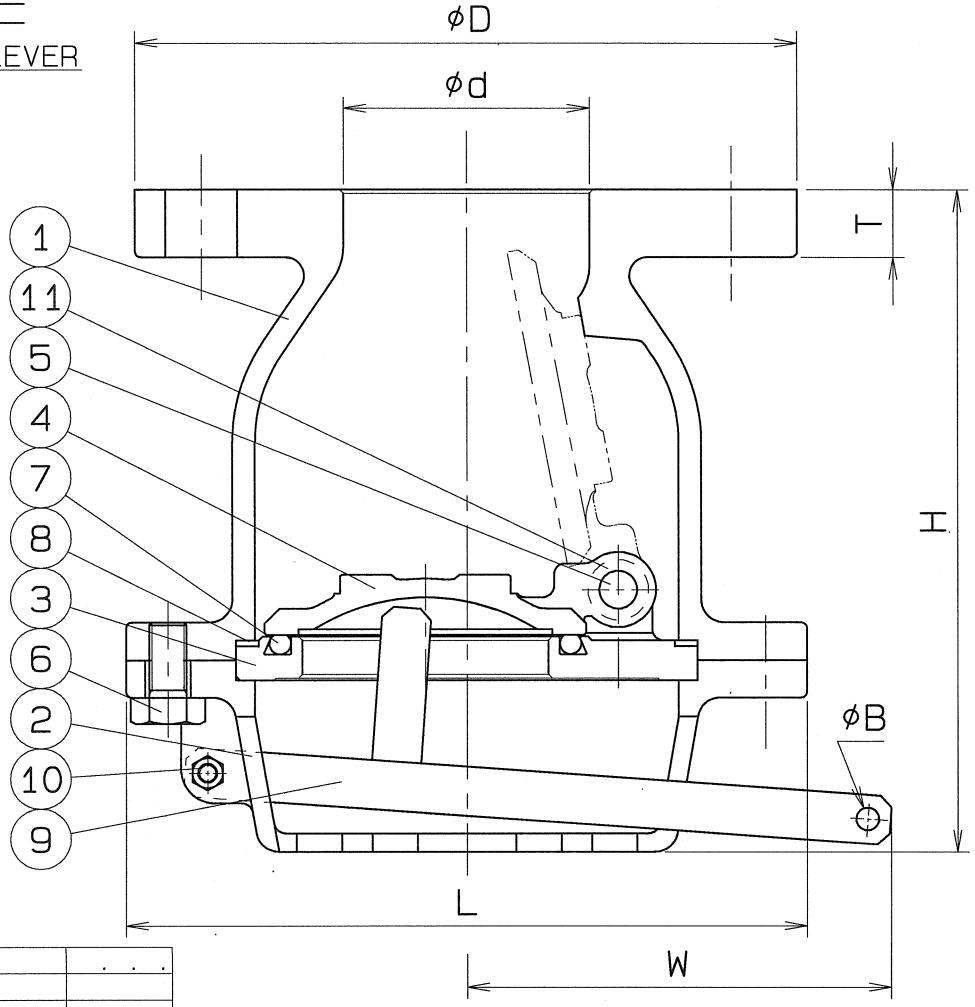

SPEC.		TEST PRESS.	
FLUID		SHELL 65~150A	HYORO 2.1 MPa (21.4kgf/cm²)
PRESS.	MPa (kgf/cm²)	SHELL 200~300A	HYORO 1.5 MPa (15.3kgf/cm²)
TEMP.	℃	SEAT	AIR 0.6 MPa (6.1 kgf/cm²)

END FLANGE : JIS B 2220
No.6 Q.TY : 65A-6 , 200, 250A-12 , 300A-14

No.	NAME OF PARTS	Q.TY	MATERIALS	REMARKS
11	BEARING	2	P.T.F.E	+SUS316
	SPRING WASHER	1	SUS 316	
	HEXAGON NUT	1	SUS 316	
10	HEXAGON BOLT	1	SUS 316	
9	LEVER	1	SUS 316	
8	GASKET PACKING	1	P.T.F.E	
7	O RING	1	NBR	
*6	HEXAGON BOLT	8	SUS 316	
5	PIN	1	SUS 316	
4	DISC	1	SCS 14A	
3	SEAT	1	SCS 14A	
2	STRAINER	1	SCS 14A	
1	BODY	1	SCS 14A	

NAME	JIS 10K FLANGED END FOOT VALVES		
TYPE	N-215L	SIZE	65A~300A
DWG.No.	FAFS-0164 ◇	APPROVED BY	S. Tsunetsu
DATE	APR.12.2007.	CHECKED BY	A. Ashida
SCALE	:	DESIGNED BY	—
THIRD ANGLE PROJECTION METHOD		DRAWN BY	N. Takatsuka

O. N. INDUSTRIES LTD.

3		. . .
2		
1		