DWG.NO. BAAS-5715 ◇

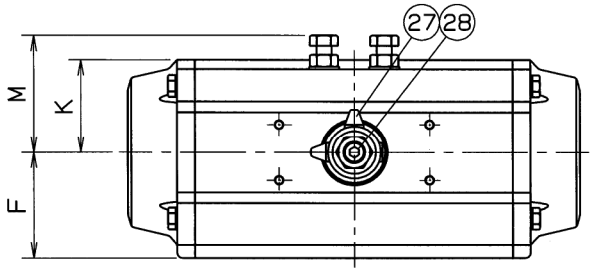

SIZE	d	L	D	T	BOLT HOLE C	BOLT HOLE n	BOLT HOLE h	A	B	E	FLANGE SIZE	H	W	F	K	M	J	CYLINDER SIZE	Q, TY
20	20	200	140	16	105	4	19	58	38	3/8	40	212	135.5	42	29	43	G1/8	AT051UD	
25	25	230	155	16	120	4	19	58	45	3/8	50	231	153.5	48.5	36	50	G1/8	AT101UD	
40	40	250	155	16	120	4	19	81	55	1/2	50	264	203.5	50.5	42.5	60	G1/8	AT201UD	
50	50	260	185	18	150	8	19	95	60	1/2	80	296	241	56.5	49.5	65	G1/8	AT251UD	
65	65	300	210	18	175	8	19	98	75	3/4	100	316	259	63	55.5	76	G1/4	AT301UD	
80	80	320	210	18	175	8	19	116	85	3/4	100	385	333	77	69.5	93	G1/4	AT401UD	
100	100	450	280	22	240	8	23	131	100	3/4	150	449	333	77	69.5	93	G1/4	AT401UD	

SPEC.		TEST PRESSURE	
FLUID	清水	SHELL	HYDRO 2.1 MPa
PRESS.	1.0 MPa 未満	SEAT	AIR 0.6 MPa
TEMP.	常温	JACKET	AIR 0.6 MPa

注) 上記の流体条件と異なる場合シリンダサイズが変更に成る場合があります。

TORQUE CYLINDER

TYPE	ATUD		
ACTION	DOUBLE	OPERATION PROPERTY	ON-OFF
SUPPLY PRESSURE	0.4 MPa	HAND DEVICE	NOTHING

FLOW DIRECTION

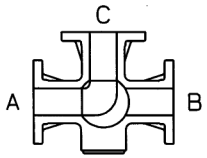

PORT2 AIR SUPPLY: A-C

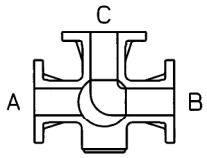

PORT4 AIR SUPPLY: B-C

END FLANGED: JIS B 2220

No.	NAME OF PARTS	Q.TY	MATERIALS	REMARKS
28	CAP HEAD BOLT	1	SUS 304	
27	INDICATOR	1	SCS 13	
*26	HEXAGON BOLT	2	SUS 304	*EXCEPT 20-65A
25	TORQUE CYLINDER	1		
24	HEXAGON BOLT	4	SUS 304	
23	COUPLING	1	SCS 13	
22	BRACKET	1	SCS 13	
21	DRAIN PLUG	1	FCMB275-5	R"E"
20	SOCKET	3	SS 400	Rp"E"
19	JACKET	1	SS 400	
18	HEXAGON NUT	4	SUS 304	
17	GLAND BOLT	2	SUS 304	
16	COVER BOLT	*4	SUS 304	*65-100A 6
15	BEARING	1	P.T.F.E.	SUS316 FILLED
14	BEARING	1	P.T.F.E.	SUS316 FILLED
13	"O" RING	3	VITON	
12	GASKET PACKING	1	P.T.F.E.	
11	COVER PACKING	1	P.T.F.E.	
10	GLAND PACKING	1SET	P.T.F.E.	
9	BALL SEAT	4	P.T.F.E.	
8	GLAND	1	SCS 13	
7	GLAND SLEEVE	1	SUS 316	
6	SEAT HOLDER (C)	1	SUS 304	
5	SEAT HOLDER (B)	3	SUS 304	
4	SEAT HOLDER (A)	3	SUS 304	
3	BALL DISC	1	SCS 13A	
2	BODY COVER	1	SCS 13A	
1	BODY	1	SCS 13A	

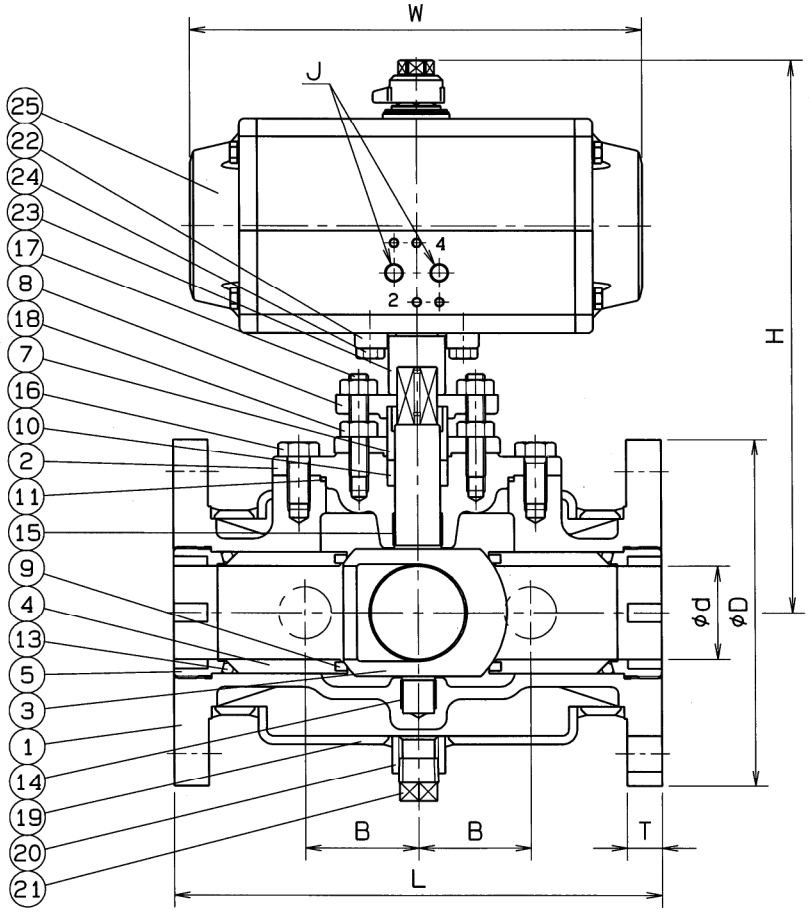

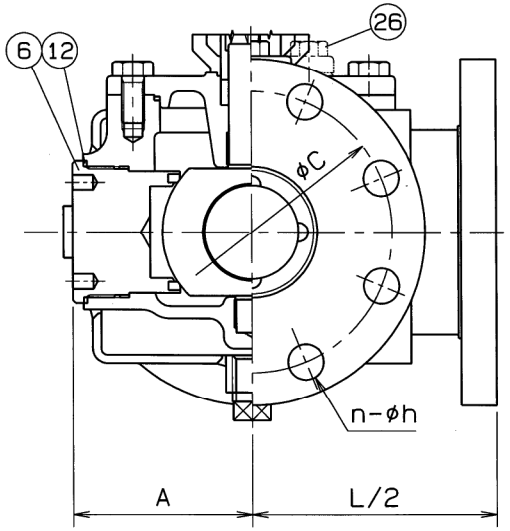

NAME	JIS 10K FLANGED ENDS TORQUE CYLINDER OPE. JACKET TYPE THREE WAY BALL VALVE		
TYPE	N-7037L-HY2	SIZE	20~100A
DWG.No.	BAAS-5715 ◇	APPROVED BY	H. Ogawa
DATE	JAN.22.2020	CHECKED BY	H. Ogawa
SCALE	:	DESIGNED BY	R. Matsuki
THIRD ANGLE PROJECTION METHOD		DRAWN BY	T. MIYOSHI

O. N. INDUSTRIES LTD.