SIZE		PIPE THREADS d_1	PIPE THREADS d_2	L	B	Q, TY
1/4	1/8	1/4	1/8	25	19	
3/8	1/8	3/8	1/8	26	22	
	1/4		1/4			

△2 MATERIAL : SUS304, SUS316

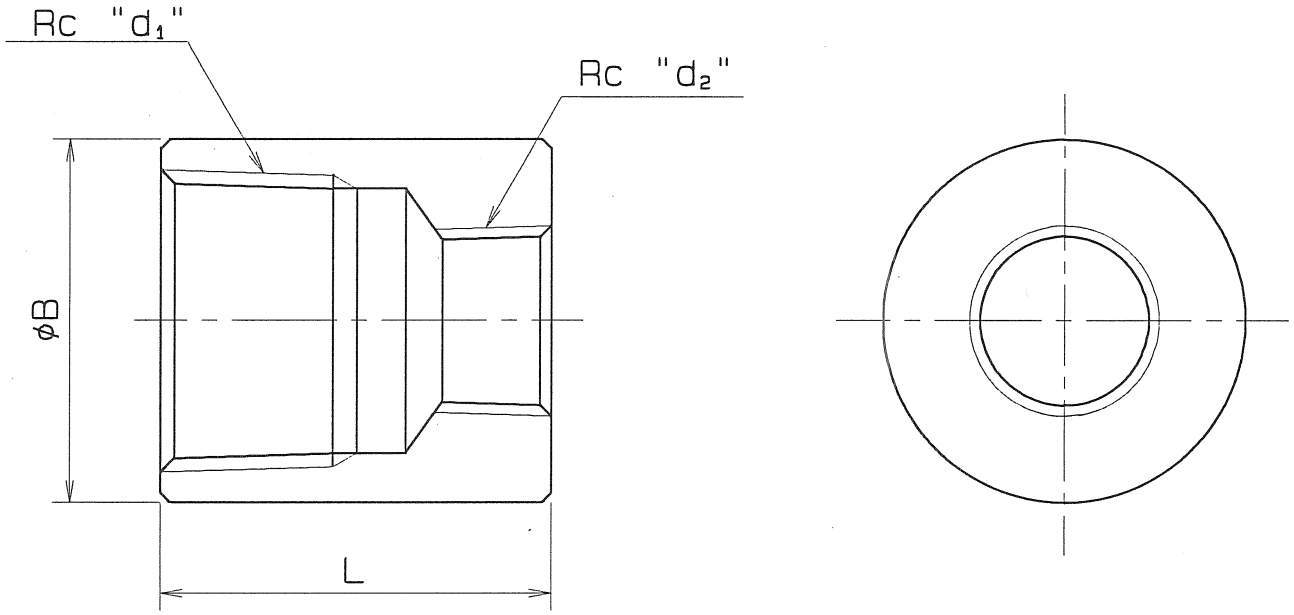

PIPE THREADS CONFORM WITH 'JIS B 0203'

△1

SPEC.		TEST PRESSURE	
FLUID		SHELL	AIR 0.6 MPa (6.1 kgf/cm²)
PRESS.	MPa (kgf/cm²)		AIR MPa (kgf/cm²)
TEMP.	℃		AIR MPa (kgf/cm²)

NAME	REDUCING SOCKET	
TYPE	–	SIZE 1/4 ~ 3/8B
DWG.No.	JADE-0015 △2	APPROVED BY R. Tsuneta
DATE	APR. 14. 1997.	CHECKED BY H. Ashida
SCALE	:	DESIGNED BY K. Matsuk
THIRD ANGLE PROJECTION METHOD		DRAWN BY

O. N. INDUSTRIES LTD.

△3		. . .
△2	1/2~1B削除	H18.11.25.
△1	検査圧力の変更	H11. 5.10.